andis®

MODEL BGC 2 SPEED CLIPPER 120 VOLT

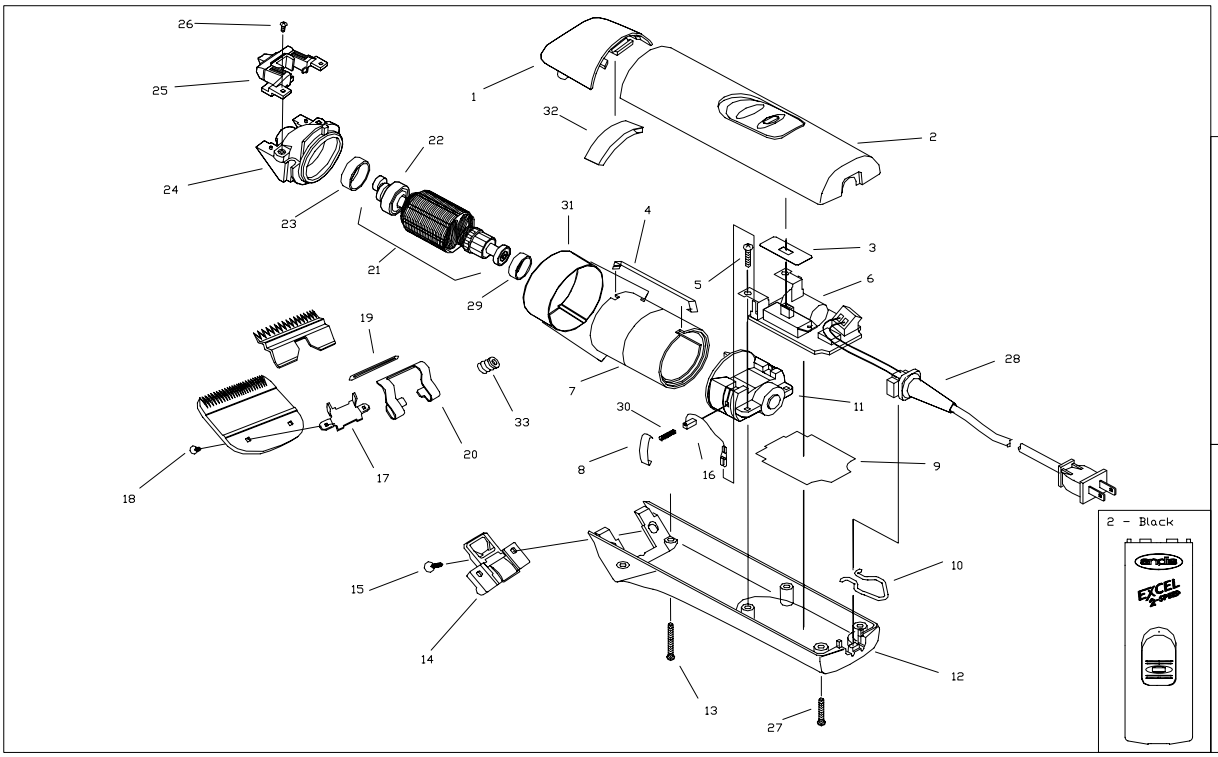

ITEM NO.	PART NO.	DESCRIPTION	QTY. REQ'D
1	65267	Drive Cap - Black	1
2	22962	Upper Housing Assy - Black	1
3	21063	Insulator	1
4	27198	Motor Frame Clip	1
5	65828	Screw	2
6	22681	Switch and Circuit Board Assembly	1
7	27352	Field Assembly	1
8	65805	Brush Retaining Clip	1
9	64965	Insulator	1
10		Hanger Bail	
10a	22267	(for units after 7/3/03)	1
10b	25061	(for units before 7/3/03)	1
11	64945	Rear Motor Frame	1
12		Lower Housing	
12a	22852	Lower Housing (BGC2 UL) - Black	1
12b	22854	Lower Housing (BGC2 CSA) - Black	1
13	64606	Front Housing Screw	2
14		Hinge Assembly	
14a	S21743	Hnge Assy (BGC & Oster 76 & 89)	1
14b	S27091	Hnge Assy (BGC & Oster 10,22,111)	1
15	27861	Blade Hinge Screw	2
16	27847	Carbon Brush With Shunt	2
17	64003	Blade Bracket	1
18	64139	Blade Screw	2
19	64027	Blade Guide	1

ITEM NO.	PART NO.	DESCRIPTION	QTY. REQ'D
20	64013	Tension Spring	1
21	21977	Armature Assembly (Includes #22)	1
22	27854	Cam and Bearing Assembly	1
23	21068	Large Bearing Cup	1
24	65013	Front Motor Frame	1
25	22319	Blade Drive Assembly	1
26	15766	Blade Drive Screw	2
27	22086	Rear Housing Screw	2
28	26049	Cord Set	1
29	21067	Small Bearing Cup	1
30	65806	Brush Spring	1
31	64991	Oil Seal	1
32	17091	Self-Adhesive Foam Pad	1
33	22909	Blade Retaining Spring	1

IMPORTANT INFORMATION

When ordering repair parts, include part number, part name and model of trimmer. For best performance, trimmer blades should be CLEANED and OILED with Andis Clipper Oil before and after use, If repair is necessary, return to any Andis Authorized Repair Service Station, or to Andis Company, 1800 Renaissance Blvd., Sturtevant, Wisconsin, 53177 U.S.A.. Pack carefully, mail either Insured Parcel Post, or U.P.S. , attach a letter to outside of package explaining difficulty.