andis®

SUPER AGR+ CLIPPER
120 VOLT

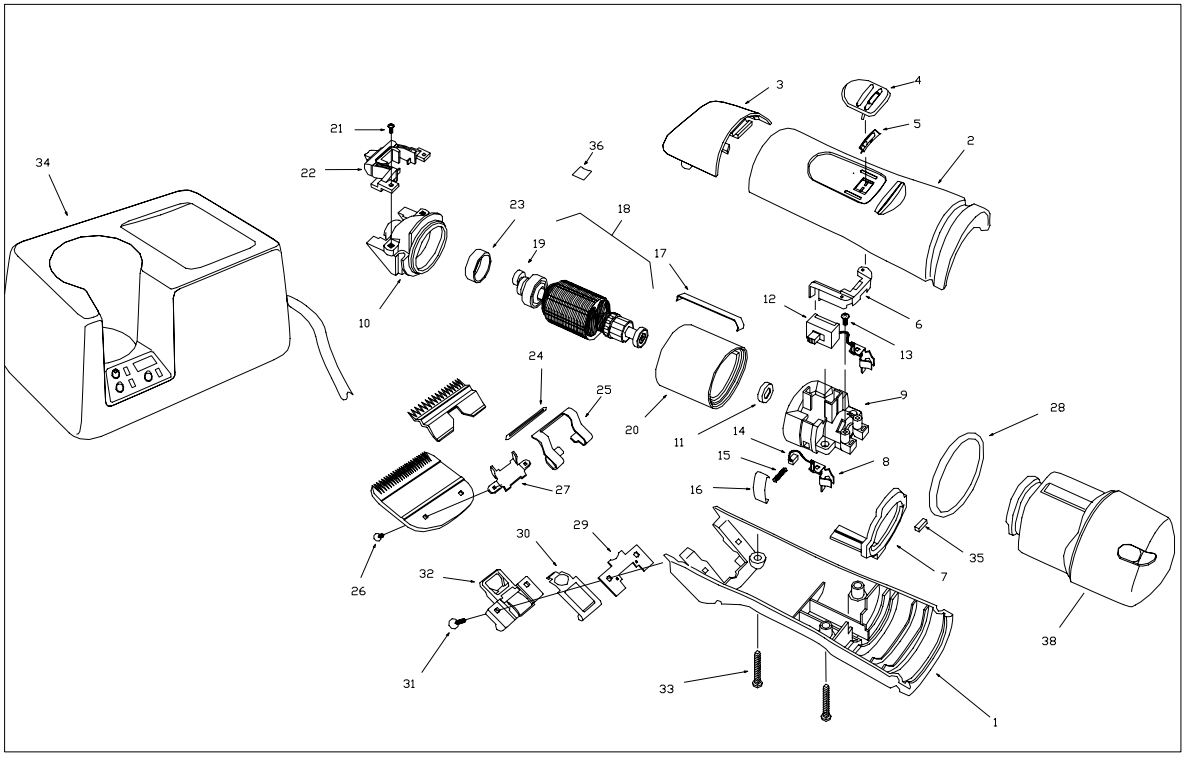

ITEM NO.	PART NO.	DESCRIPTION	QTY. REQ'D
1	64789	Lower Housing	1
2	63926	Upper Housing	1
3	65267	Drive Cap	1
4	64902	Switch Button	1
5	64794	Switch Button Lock	1
6	64788	Switch Button Retainer	1
7	64527	Lock Ring	1
8	64508	Motor Battery Contacts	2
9	64944	Rear Motor Frame	1
10	65013	Front Motor Frame	1
11	21067	Small Bearing Mounting Ring	1
12	64507	Switch	1
13	57993	Screw, 5-18 x 0.375	6
14	64503	Copper Brush with Shunt	2
15	65806	Brush Spring	2
16	65805	Brush Retainer Clip	2
17	64514	Motor Frame Clip	2
18	64726	Armature Assembly	1
19	27251	Cam Assembly	1
20	64860	Magnetized Field Assembly	1
21	15766	Screw, 4-40 x 7/32	2
22	22319	Blade Drive Assembly	1
23	21068	Large Bearing Mounting Ring	1
24	64027	Blade Guide	1
25	64013	Tension Spring	1

ITEM NO.	PART NO.	DESCRIPTION	QTY. REQ'D
26	64139	Blade Screw	2
27	64003	Blade Bracket	1
28	64784	O-Ring	1
29	64535	Lock Keeper	1
30	64537	Blade Lock	1
31	27861	Screw, Blade Hinge	2
32	S63897	Hinge Assembly	1
33	64606	Housing Screw	4
34		Charger Base Assembly	1
34a	64710	Charger Assembly UL	1
34b	64360	Charger Assembly CSA	1
35	64754	Foam Pad	1
36	64916	Oil Seal	1
37	64526	Positive Lead Wire (Not shown)	1
38	64715	Battery Pack	1

IMPORTANT INFORMATION

When ordering repair parts, include part number, part name and model of trimmer. For best performance, trimmer blades should be CLEANED and OILED with Andis Clipper Oil before and after use, If repair is necessary, return to any Andis Authorized Repair Service Station, or to Andis Company, 1800 Renaissance Blvd., Sturtevant, Wisconsin, 53177 U.S.A.. Pack carefully, mail either Insured Parcel Post, or U.P.S. , attach a letter to outside of package explaining difficulty.